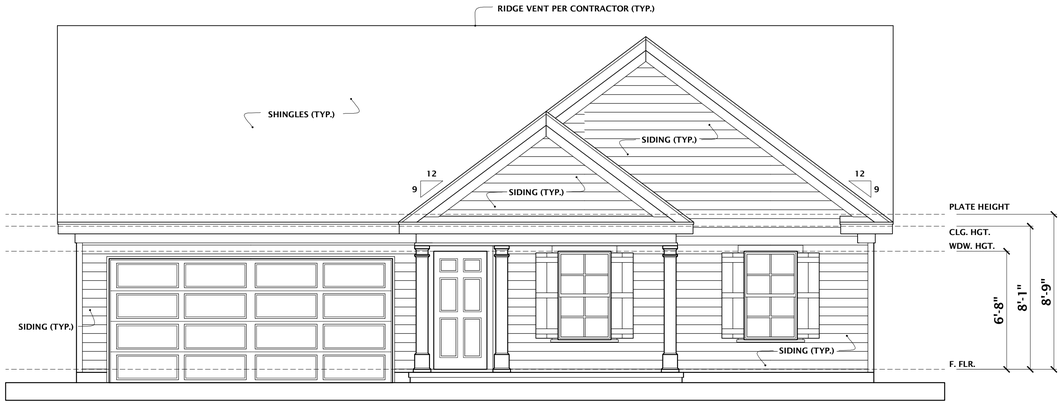

FRONT ELEVATION A

SCALE 1/4" = 1'-0"

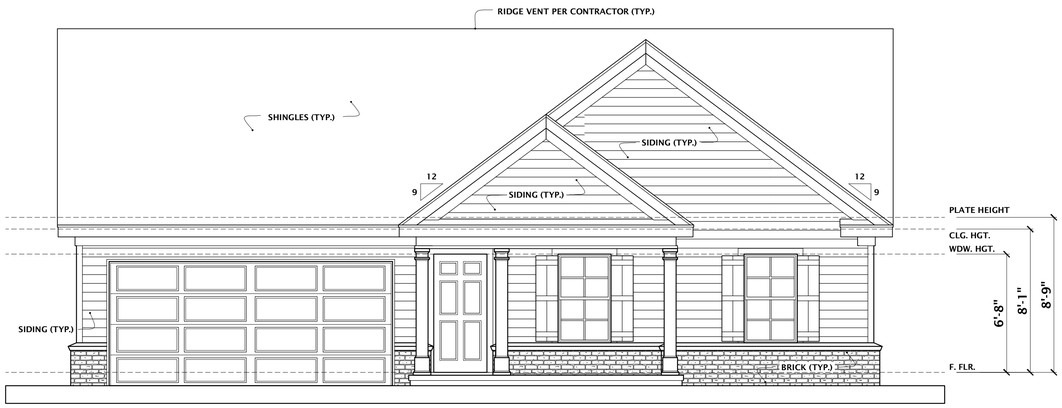

FRONT ELEVATION B

SCALE 1/4" = 1'-0"

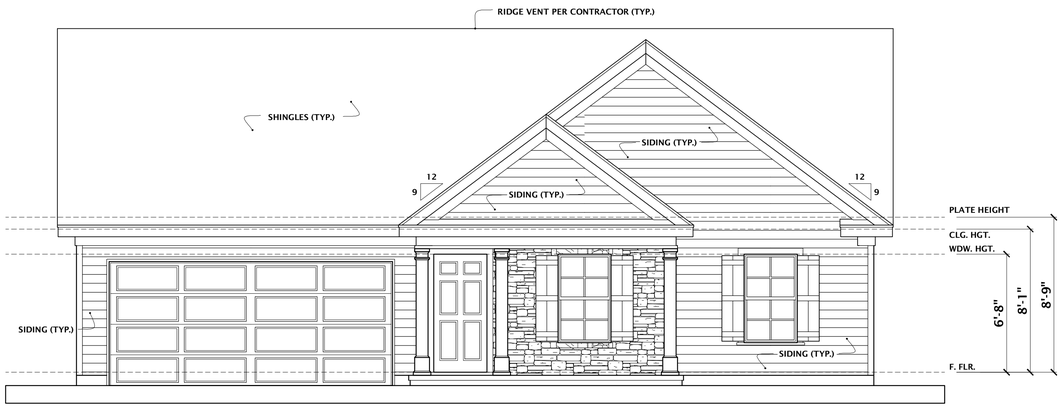

FRONT ELEVATION C

SCALE 1/4" = 1'-0"

0 1' 2' 3' 4' 5' 6' 7' 8' 9' 10' 20'

GRAPHIC SCALE 1/4" = 1'-0"

DO NOT SCALE DRAWINGS. CONTRACTOR TO FIELD VERIFY DIMENSIONS PRIOR TO CONSTRUCTION.

REVISIONS

NO.	DATE	DESCRIPTION
1	2-6-18	PROJ. # 2018-031

This Drawing is the intellectual Property of HOUSE PLANS, INC. The Duplication, Reproduction, Copying, Sale, Rental, Licensing, or any other distribution or use of these Drawings, any portion thereof, or the plans depicted hereon is Stirctly prohibited unless expressly authorized in writing by HOUSE PLANS INC.

HOUSE PLANS, INC.
CRAIG G. PEEL
P.O. BOX 267 EVANS, GEORGIA 30809 (706) 650-8283 www.craigpeel.com

CUSTOMER OR BUILDER:

R.T. BAILEY CONSTRUCTION

THE ANNA

ISSUE DATE: FEBRUARY 6, 2018

DESIGNED BY: CGP

DRAWN BY: MCT

SHEET TITLE: ELEVATIONS

PROJECT NUMBER: 1525

SHEET NUMBER: 1 OF 5

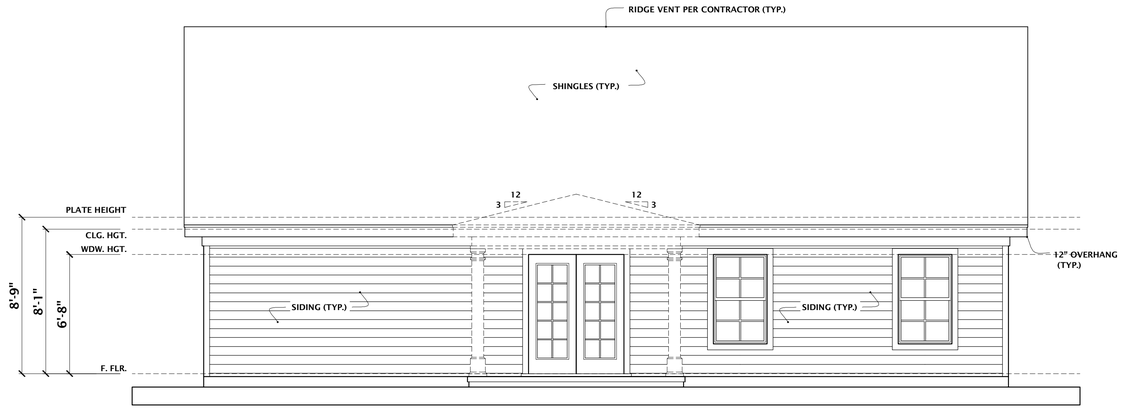

REAR ELEVATION

SCALE 1/4" = 1'-0"

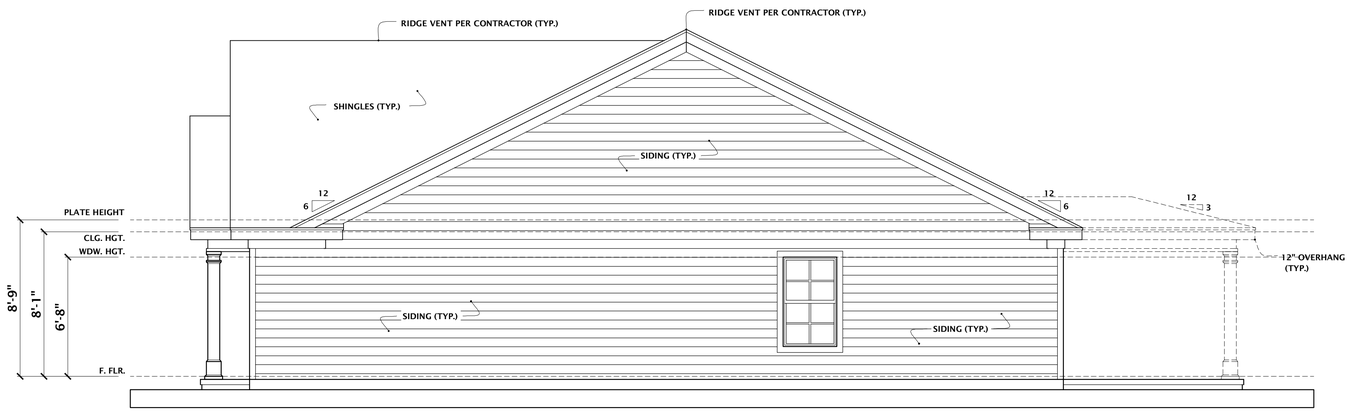

LEFT ELEVATION

SCALE 1/4" = 1'-0"

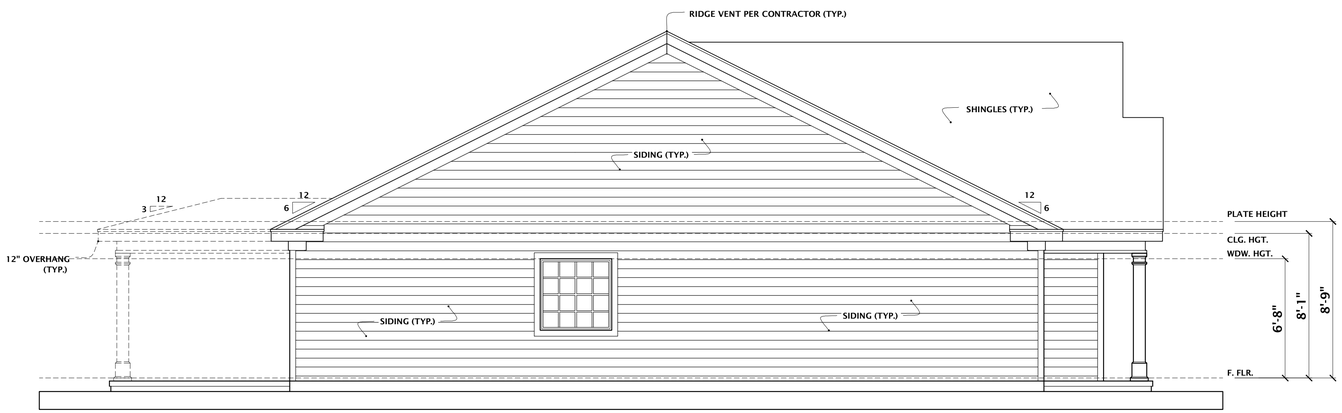

RIGHT ELEVATION

SCALE 1/4" = 1'-0"

GRAPHIC SCALE 1/4" = 1'-0"

DO NOT SCALE DRAWINGS. CONTRACTOR TO FIELD VERIFY DIMENSIONS PRIOR TO CONSTRUCTION.

REVISIONS

NO.	DATE	DESCRIPTION
1	2-6-18	PROJ. # 2018-031

This Drawing is the intellectual Property of HOUSE PLANS, INC.
The Duplication, Reproduction, Copying, Sale, Rental, Licensing, or any other distribution or use of these Drawings, any portion thereof, or the plans depicted hereon is Stirctly prohibited unless expressly authorized in writing by HOUSE PLANS INC.

HOUSE PLANS, INC.
CRAIG G. PEEL
P.O. BOX 267 EVANS, GEORGIA 30809 (706) 650-8283 www.craigpeel.com

CUSTOMER OR BUILDER:

R.T. BAILEY CONSTRUCTION
THE ANNA

ISSUE DATE: FEBRUARY 6, 2018

DESIGNED BY: CGP

DRAWN BY: MCT

SHEET TITLE: ELEVATIONS

PROJECT NUMBER: 1525

SHEET NUMBER: 2 OF 5

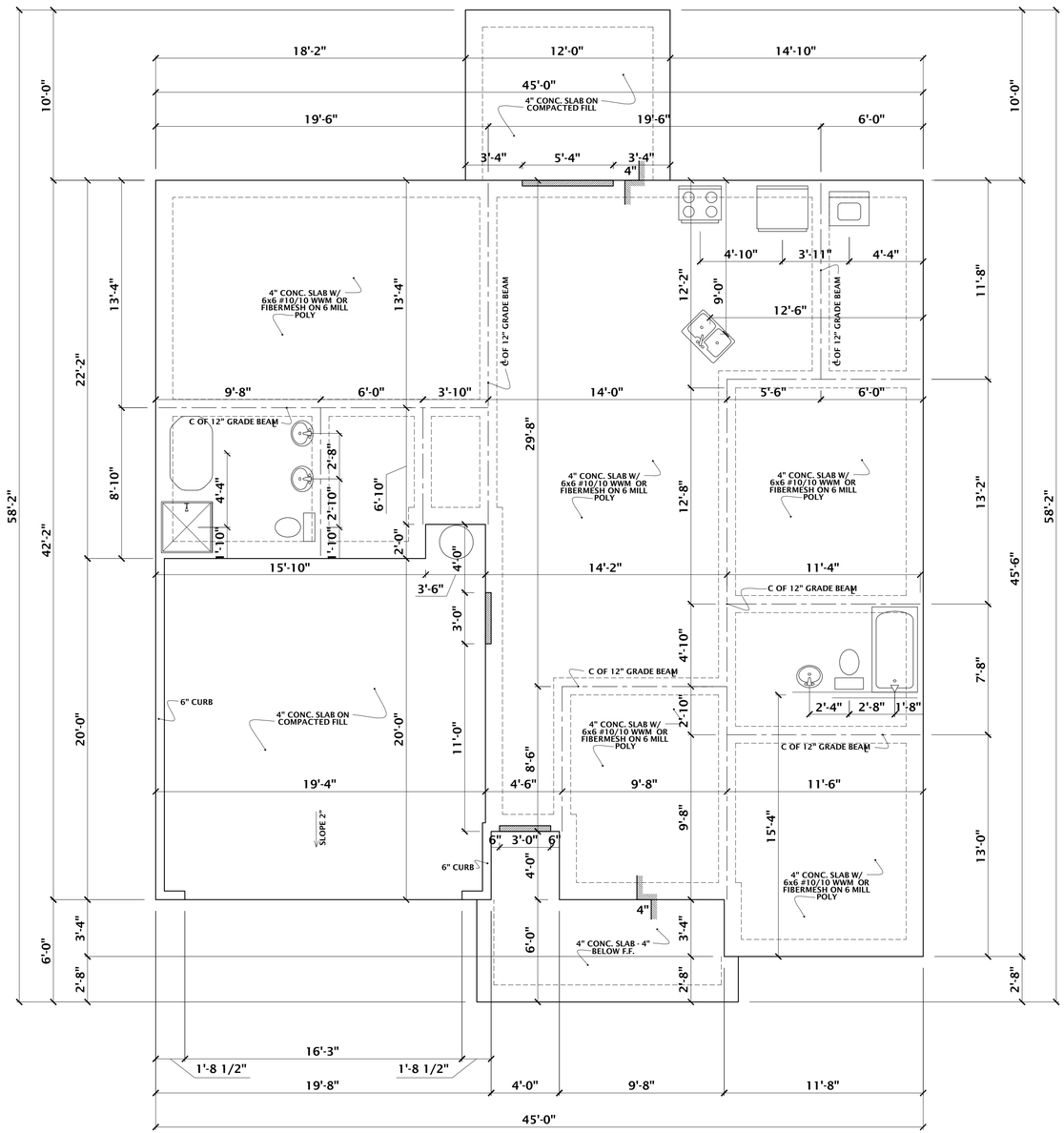

FOUNDATION PLAN

SCALE 1/4" = 1'-0"

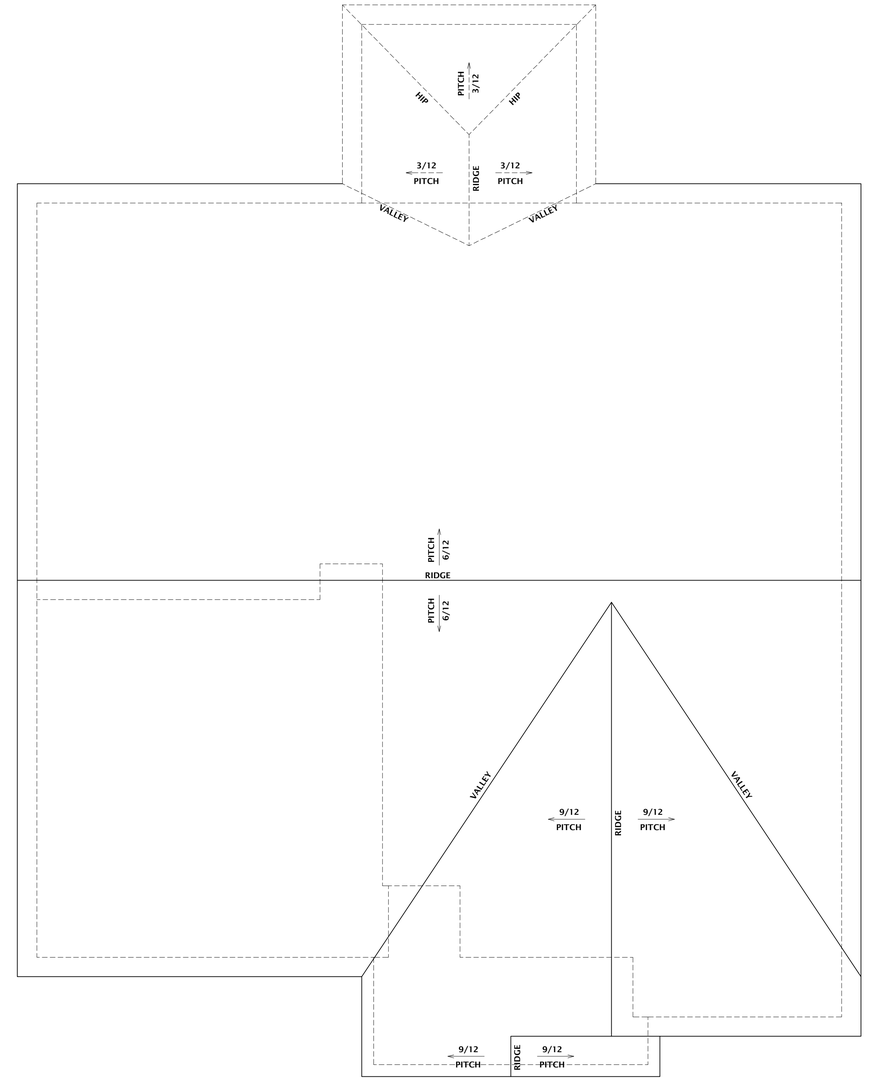

ROOF PLAN

SCALE 1/4" = 1'-0"

0 1' 2' 3' 4' 5' 6' 7' 8' 9' 10' 20'

GRAPHIC SCALE 1/4" = 1'-0"

DO NOT SCALE DRAWINGS. CONTRACTOR TO FIELD VERIFY DIMENSIONS PRIOR TO CONSTRUCTION.

REVISIONS

NO.	DATE	DESCRIPTION
1	2-6-18	PROJ. # 2018-031

This Drawing is the intellectual Property of HOUSE PLANS, INC.
The Duplication, Reproduction, Copying, Sale, Rental, Licensing, or any other distribution or use of these Drawings, any portion thereof, or the plans depicted hereon is Strictly prohibited unless expressly authorized in writing by HOUSE PLANS INC.

HOUSE PLANS, INC.
CRAIG G. PEEL
P.O. BOX 267 EVANS, GEORGIA 30809 (706) 650-8283 www.craigpeel.com

CUSTOMER OR BUILDER:

R.T. BAILEY CONSTRUCTION
THE ANNA

ISSUE DATE: FEBRUARY 6, 2018

DESIGNED BY: CGP

DRAWN BY: MCT

SHEET TITLE: FOUNDATION/ROOF PLAN

PROJECT NUMBER: 1525

SHEET NUMBER: 3 OF 5

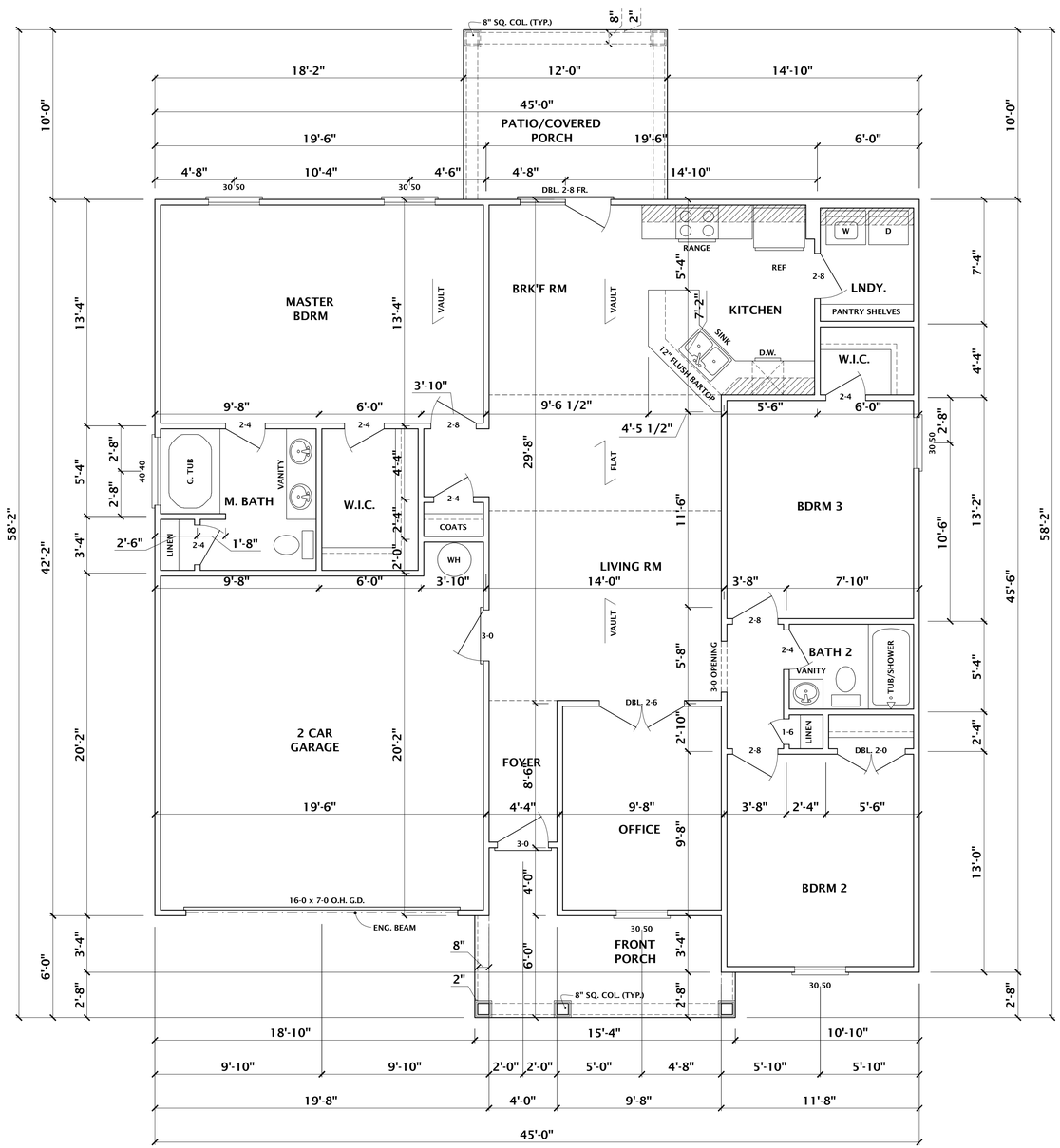

FLOOR PLAN

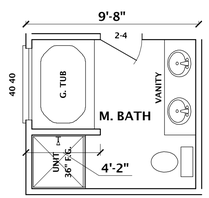

OPT M. BATH

SCALE 1/4" = 1'-0"

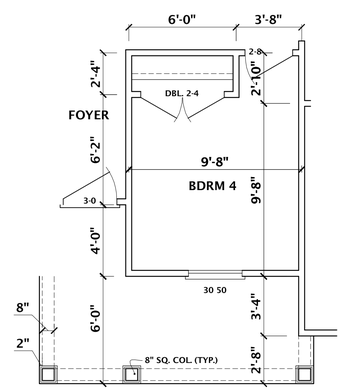

OPT. BDRM 4

SCALE 1/4" = 1'-0"

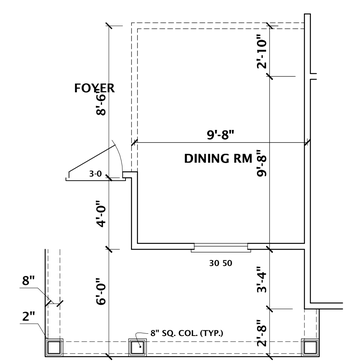

OPT. DINING RM

SCALE 1/4" = 1'-0"

SCALE 1/4" = 1'-0"

ESTIMATED SQUARE FOOTAGE	
TOTAL HTD.	1525 SQ. FT.
FRONT PORCH	105 SQ. FT.
GARAGE	408 SQ. FT.
TOTAL	2028 SQ. FT.
OPT. COV. PORCH	120 SQ. FT.

GRAPHIC SCALE 1/4" = 1'-0"

0 1' 2' 3' 4' 5' 6' 7' 8' 9' 10' 20'

DO NOT SCALE DRAWINGS. CONTRACTOR TO FIELD VERIFY DIMENSIONS PRIOR TO CONSTRUCTION.

REVISIONS

NO.	DATE	DESCRIPTION
1	2-6-18	PROJ. # 2018-031

This Drawing is the intellectual Property of HOUSE PLANS, INC.
The Duplication, Reproduction, Copying, Sale, Rental, Licensing, or any other distribution or use of these Drawings, any portion thereof, or the plans depicted hereon is Strictly prohibited unless expressly authorized in writing by HOUSE PLANS INC.

HOUSE PLANS, INC.
CRAIG G. PEEL
P.O. BOX 267 EVANS, GEORGIA 30809 (706) 650-8283 www.craigpeel.com

CUSTOMER OR BUILDER:
R.T. BAILEY CONSTRUCTION
THE ANNA

ISSUE DATE: FEBRUARY 6, 2018
DESIGNED BY: CGP
DRAWN BY: MCT
SHEET TITLE: FLOOR/ELECTRICAL PLAN
PROJECT NUMBER: 1525
SHEET NUMBER: 4 OF 5

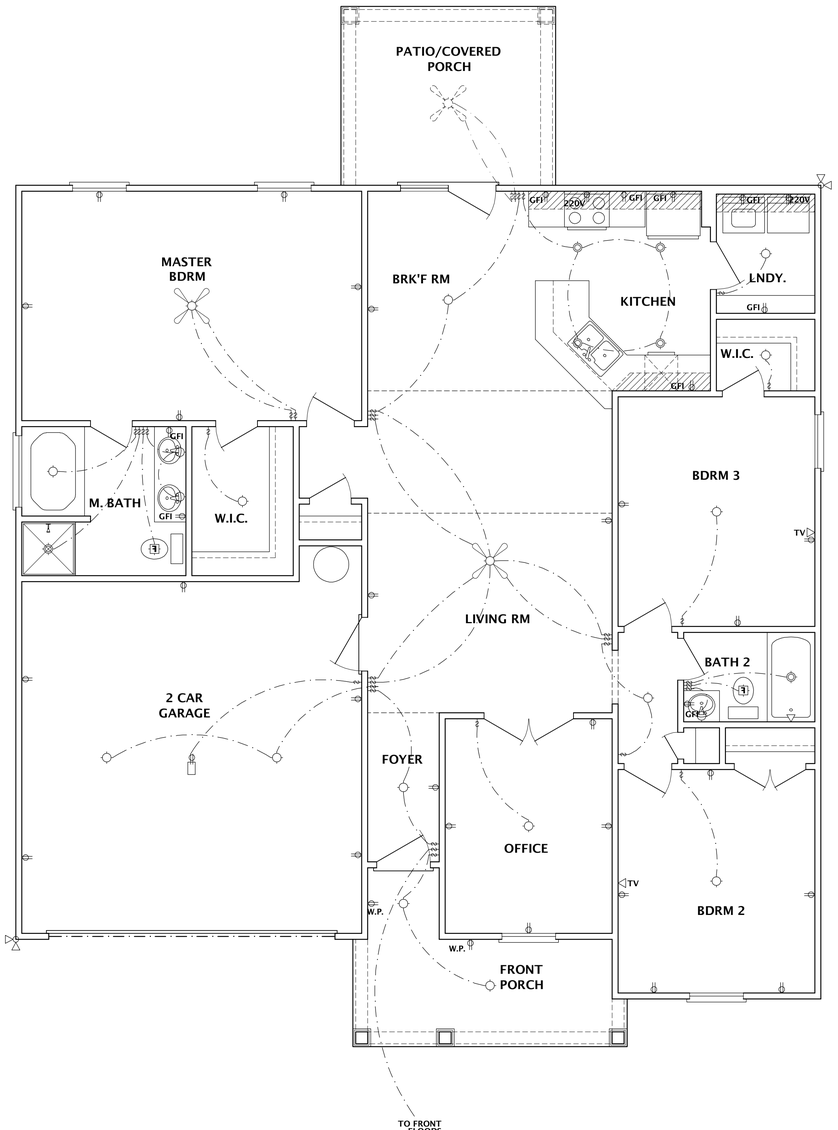

ELECTRICAL PLAN

SCALE 1/4" = 1'-0"

FOUNDATION / PLUMBING NOTES:

FOUNDATION LEGEND

- FOUNDATION FOOTING
- 8" BLOCKING
- 4" SLAB STEP
- EXTERIOR DOOR LOCATION
- 12" GRADE BEAM
- VANITY
- TOILET
- TUB/SHOWER
- DISH WASHER
- KITCHEN SINK
- REF
- RANGE

NOTES:

1. DIMENSIONS TO OUTSIDE OF FOUNDATION.
2. CONTRACTOR TO FIELD DETERMINE FTG. SIZE. (WIDTH & DEPTH) DEPENDING ON SOIL CONDITIONS AND ALL BUILDING CODES.
3. IF TRUSSING ROOF GRADE BEAMS TO BE PLACE PER MANUFACTURE'S REQUIREMENTS.
4. CONTRACTOR TO ADD BRICK/STONE PER ELEVATIONS. ADJUSTMENTS TO BE MADE IN THE FIELD.
5. ELECTRICAL CONDUILT TO BE INSTALLED TO KITCHEN ISLAND.

ELECTRICAL NOTES:

ELECTRICAL LEGEND

CEILING FAN W/ LIGHT (PROVIDE ADEQUTE SUPPORT)	
CEILING FAN (PROVIDE ADEQUTE SUPPORT)	
WALL & CLG MOUNT LIGHT	
RECESSED LIGHT	
EXHAUST FAN W/ LIGHT	
EXHAUST FAN	F
GARAGE DOOR OPENER	
SMOKE DETECTOR	
GARBAGE DISP.	DISP.
DUPLEX OUTLET	
WP DUPLEX OUTLET	W.P./GFI
GROUND-FAULT DUPLEX OUTLET	GFI
220 VOLT OUTLET	220 V
ELECTRICAL PANEL	PANEL
TELEPHONE OUTLET	PH
CABLE TV OUTLET	TV
LIGHT SWITCH	
PUSH BUTTON FOR DOOR CHIME	P.B.
DOOR CHIME	CH
THERMOSTAT	
DOUBLE FLOOD LIGHT	

1. ALL ELECTRICAL TO BE PLACED PER CODES. CONTRACTOR TO MAKE ADJUSMENTS IN THE FIELD AS REQ'D.

WINDOW & DOORS NOTES:

1. FIRST FLOOR WINDOWS @ 6'-8" HEADER HEIGHT. UNLESS OTHERWISE NOTED.
2. CONTRACTOR TO VERIFY ALL WINDOW SIZE FOR EGRESS PER MANUFACTURE.
3. CONTRACTOR TO VERIFY ALL WINDOW SIZE FOR EGRESS PER MANUFACTURE.

GENERAL NOTES:

1. DIMENSIONS TO FRAMED WALL.
2. ALL DIMENSIONS ARE FROM WALL EDGE TO CENTER OF INTERIOR WALL.
3. CONTRACTOR TO VERIFY LOCAL CODES BEFORE START OF CONSTRUCTION. ADJUSTMENTS TO BE MADE IN THE FIELDAS REQ'D IF PLAN DIFFER.
4. CONTRACTOR TO ADD BRICK/STONE PER ELEVATIONS. ADJUSTMENTS TO BE MADE IN THE FIELD.
5. IF I-JOIST OR WEB TRUSS USED TO SPAN GARGE DROP CEILING ACCORDINGLY.
6. CONTRACTOR TO ADD ATTIC ACCESS AS REQ'D PER CODES. ADJUSTMENTS TO BE MADE IN THE FIELD.
7. CONTRACTOR TO ADD RAILING AS REQ'D PER CODE.

0 1' 2' 3' 4' 5' 6' 7' 8' 9' 10' 20'

GRAPHIC SCALE 1/4" = 1'0"

DO NOT SCALE DRAWINGS. CONTRACTOR TO FIELD VERIFY DIMENSIONS PRIOR TO CONSTRUCTION.

REVISIONS

NO.	DATE	DESCRIPTION
1	2-6-18	PROJ. # 2018-031

This Drawing is the intellectual Property of HOUSE PLANS, INC. The Duplication, Reproduction, Copying, Sale, Rental, Licensing, or any other distribution or use of these Drawings, any portion thereof, or the plans depicted hereon is Strictly prohibited unless expressly authorized in writing by HOUSE PLANS INC.

HOUSE PLANS, INC.
CRAIG G. PEEL
P.O. BOX 267 EVANS, GEORGIA 30809 (706) 650-8283 www.craigpeel.com

CUSTOMER OR BUILDER:

R.T. BAILEY CONSTRUCTION

THE ANNA

ISSUE DATE: FEBRUARY 6, 2018

DESIGNED BY: CGP

DRAWN BY: MCT

SHEET TITLE: ELECTRICAL PLAN/NOTES

PROJECT NUMBER: 1525

SHEET NUMBER: 5 OF 5